STUDIO BAGNO

MANHATTAN SQUEEZE

STYLE

Undercounter

CODE

SB4030

COLOURS

White

WEIGHT

5.5kg

CAPACITY TO OVERFLOW

11 Litres

OVERFLOW & WASTE

32 mm overflow plug & waste not included

RECOMMENDED PLUG & WASTE

SBW003

NOTES

Not glazed at rear

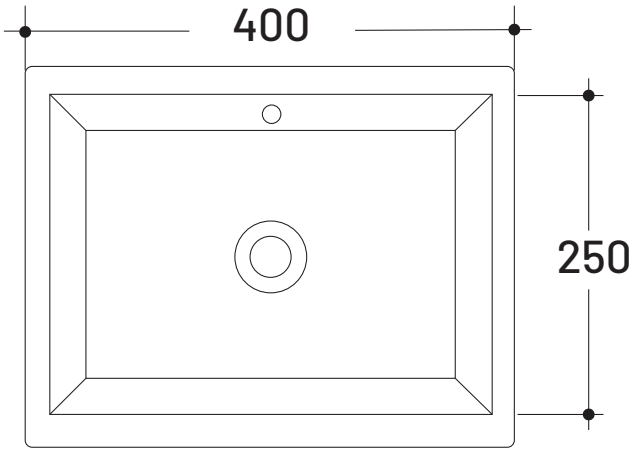

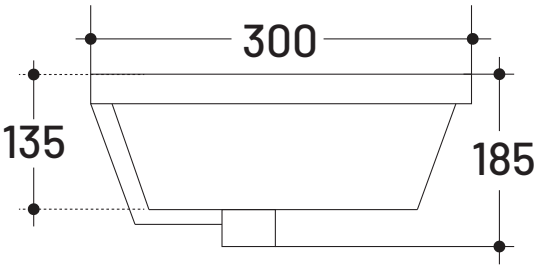

Note: All dimensions are in millimetres and are subject to normal manufacturing variances.
Studio Bagno Pty Ltd reserves the right to vary specifications at any time without notice. Date created: 14/01/2021